BBENGINEERING
The Valueneering Company®

Recycling
technologies

Close the circle with rPET systems for fibers and more

BBE ENGINEERING
The Valueneering Company®

Contents

Foreword . . . 3
The potential of PET recycling . . . 4

VacuFil® – PET recycling line . . . 6
Functions & features. . . . 7
Application examples . . . 8
Visco+ vacuum filter . . . 12
Technical specifications – IV process range . . . 14
VacuFil® types and their throughput . . . 14
VacuFil® benefits at a glance . . . 15

VarioFil® R/R+ compact spinning line. . . . 16
Configuration examples. . . . 18

rPET compatible extrusion technologies. . . . 20
Extruders . . . 21
Mixing heads . . . 22
3DD mixing standalone unit . . . 22

rPET compatible filtration technologies . . . 24
Filters . . . 24
White Filter Cleaning (WFC) . . . 25

BBE Valueneering . . . 26
Worldwide operation . . . 27
Let's get in touch . . . 27

Foreword

The sustainable use of resources and the reduction of our shared CO_2 footprint are important global tasks. Worldwide, society and, in particular, consumers are increasingly focusing on sustainable products and the conscious use of resources within the markets. And that's a good thing. More and more, we pursue responsible consumption and production patterns in order to support climate protection measures. This relates in particular to the further development of the circular economy for post-consumer or post-production waste. For this reason, the recyclability of PET products made by the manmade fiber industry is attributed special significance.

Plastics are often rejected wholesale within the public environmental debate –unjustly, because life today would be sheer impossible without them. On the contrary, demand for polyester is increasing from year to year, while the availability of raw materials is declining. Combined with rising raw material prices and environmental standards, the value of polyester is becoming clear and hence also the potential recycling it offers. Polyester recycling represents an inexpensive secondary resource – and entirely without quality compromises, if done correctly. In the textile sector, fibers made from recycled polyester, for example, entered the high-end segment long ago. The trend towards increasingly high-end products made from rPET clearly demonstrates that post-consumer and post-production polyester is more than just waste.

The origins of our company lie in the manufacture of extruders for spinning man-made fibers and producing films. Over the course of the years, we have swiftly expanded our portfolio, which meanwhile offers our clients innovative and tailor-made solutions for processing various polymers – from the most diverse extrusion and filtration components and engineering services all the way through to entire spinning and recycling systems. We are familiar with the requirements and challenges of the market. Because we know: producing rPET is not difficult. In contrast, producing rPET with the appropriate quality and its further processing into high-end applications is, however, challenging. Thanks to our expertise, we are able to offer recycling solutions that work in practice and increase the value of your recycled materials and thus your products.

Recycling technologies

BBENGINEERING
The Valueneering Company®

The potential of PET recycling

The global fiber production has doubled the last 20 years (2019: 111 million mt) and is expected to grow by a further 30% over the next 10 years. In total PET has a market share of 52% of global fiber production with approx. 57 million mt in 2019 (source: Textile Exchange).

The reasons for this are obvious: the constantly-rising global population and the continuing trend towards fast-fashion are forcing manufacturers to increase their capacities – even if the media are promoting the avoidance of plastics. For this reason, establishing a circular economy is all the more important – and lucrative.

The undoubtedly simplest way to create a circular economy is to recycle in-house production waste. The benefits are that origin & composition are known and disposal costs can be saved.

The recyclable output is often greater than anticipated.

Even PET bottles provide potential material for PET recycling. 485 billion bottles produced globally in 2020 (source: statista). This corresponds to around 1 million a minute and represents a potential feedstock of >16 million tons per year. Some countries are already operating return systems for PET bottles; through deposits on bottles, for example. Also, in the case of packaging film, supply and demand of biaxially oriented PET has risen in the past 20 years constantly and the growth is expected to continue. And these are only few application examples of polyester.

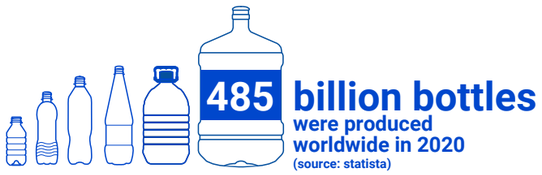

≈1 million per minute

potential raw material of
>16 million tons
per year

Global demand for polyester fiber (PET)

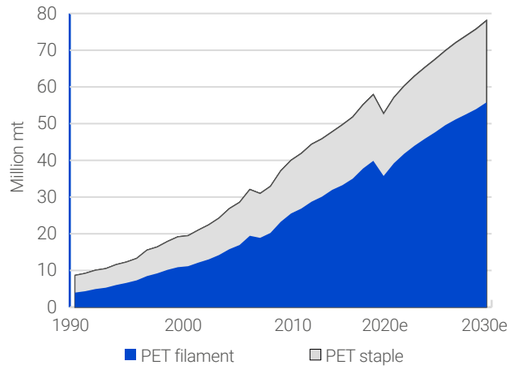

Source: PCI Red Book 2019 and Barmag market research

Global demand for polyester film (BOPET)

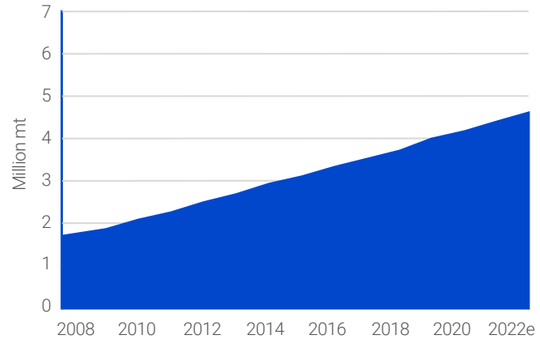

Source: PCIWood Mackenzie Report

Recycling potential of spinning plants

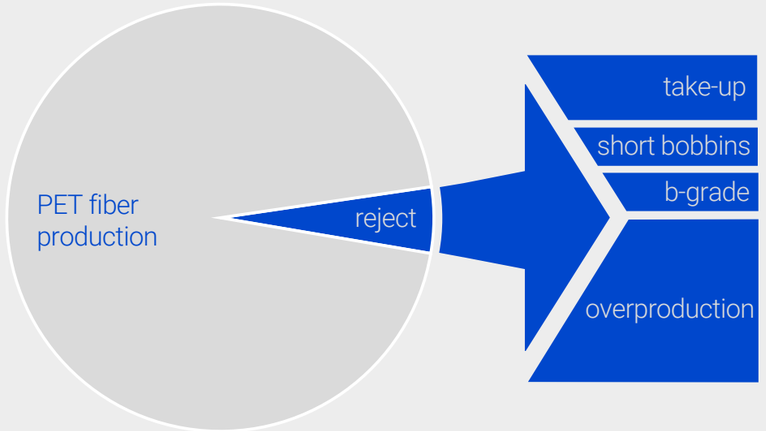

Source: BUND Plastik Atlas 2019; Euromonitor / The Guardian 2017

PET recycling targets

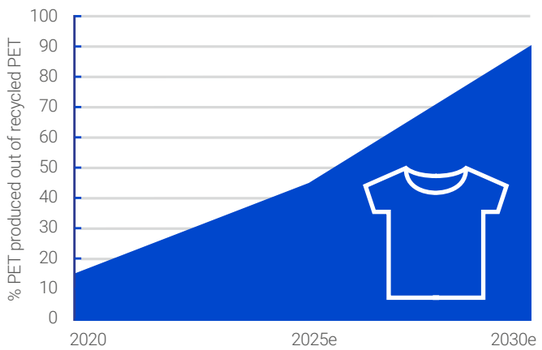

Overall, the textile and apparel industry is responsible for 32 million tons of the 57 million tons of PET processed each year. In this industry currently 14% of PET is produced out of recycled PET. Textile Exchange (NGO) and United Nations have launched a joint initiative, the Recycled Polyester Challenge to pursue the goal of rising the share of recycled polyester in the textile and apparel industry from 14% to 45% by 2025 up to 90% in 2030.

Source: Preferred Fiber & Materials Market Report 2020 by Textile Exchange

Recycling technologies

BBENGINEERING
The Valueneering Company®

VacuFil® – PET recycling line

Make your own rPET – be independent and close the loop

VacuFil® is a unique and innovative PET recycling line, uniting gentle large-scale filtration and targeted IV regulation for consistently outstanding rPET melt quality. The patented key component Visco+ vacuum filter quickly and reliably removes volatile contamination.

With VacuFil®, you can adapt your recycling process flexibly to your individual needs and generate clean rPET for various downstream forms of processing. This is the way to produce high-quality end products in an energy-efficient and uncomplicated manner – and directly with 100 % post-production/post-consumer or with blends with virgin materials.

Functions & features

Filtration & decontamination

FDA & EFSA approved process

- Continuous multi-step filtration for high contamination levels
- Gentle 20µm fine filtration at lowest fluxrates of <100 kg/m²/h and low pressure drops
- Customized filtration systems
- Unique degassing

Downstream options

- Melt modification
- Inline-viscosimeter
- Color measurement
- Pelletizing
- Direct injection to subsequent production processes
- Inline spinning out of one hand with our VarioFil® line (see page 16)

Precise IV control – if needed

- Method: liquid state polycondensation (LSP)
- Viscosity build-up: up to 30% in dependence on throughput
- Homogeneity: ± 0,01 dl/g
- Velocity: 50% faster than common LSP systems
- Stable, reproducible output due to continual monitoring using a inline-viscometer

Flexible & modular

- Various input possibilities: bottle flakes, textile waste, post-production fiber waste, start-up lumps, film, chips, pellets
- IV flexibly adjustable
- Tailor-made configuration
- Standalone or inline version
- Optional features can be added e.g. additives mixing, color injection, White Filter Cleaning (see page 25)

Recycling technologies

BBENGINEERING
The Valueneering Company®

VacuFil® basic recycling process
Application examples:
Bottle-to-fiber grade resin / bottle-to-bottle grade resin

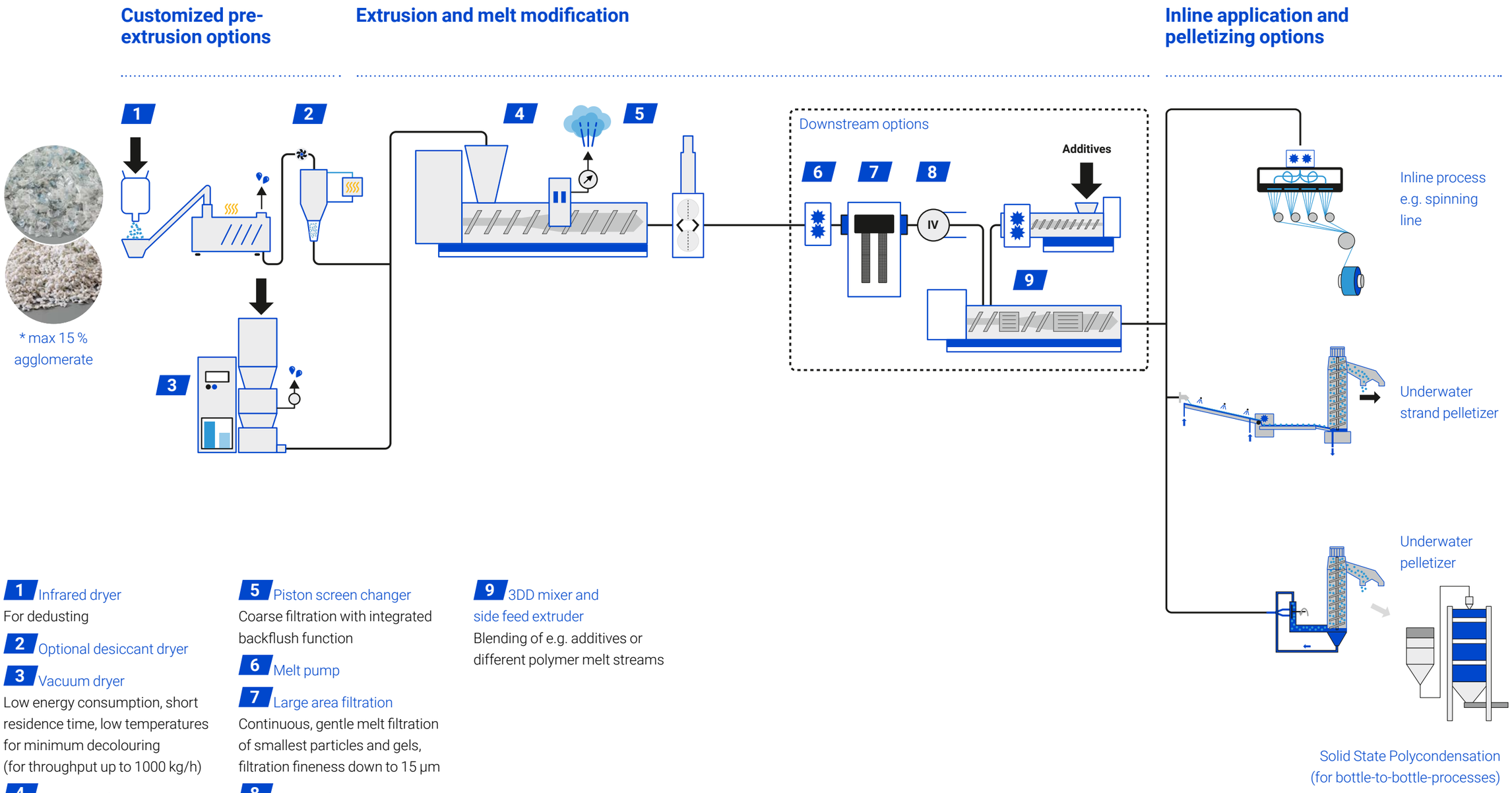

1 Infrared dryer
For dedusting

2 Optional desiccant dryer

3 Vacuum dryer
Low energy consumption, short residence time, low temperatures for minimum decolouring (for throughput up to 1000 kg/h)

4 Vacuum extrusion
Decontamination and homogenization

5 Piston screen changer
Coarse filtration with integrated backflush function

6 Melt pump

7 Large area filtration
Continuous, gentle melt filtration of smallest particles and gels, filtration fineness down to 15 µm

8 Viscometer
Reliable measuring of viscosity, monitoring production

9 3DD mixer and side feed extruder
Blending of e.g. additives or different polymer melt streams

Recycling technologies

BBENGINEERING
The Valueneering Company®

VacuFil® Visco+ advanced recycling process
Application examples:
Fiber-to-fiber grade resin / sheet-to-sheet grade resin

Customized pre-extrusion options

Extrusion, IV increase and melt modification

Inline application and pelletizing options

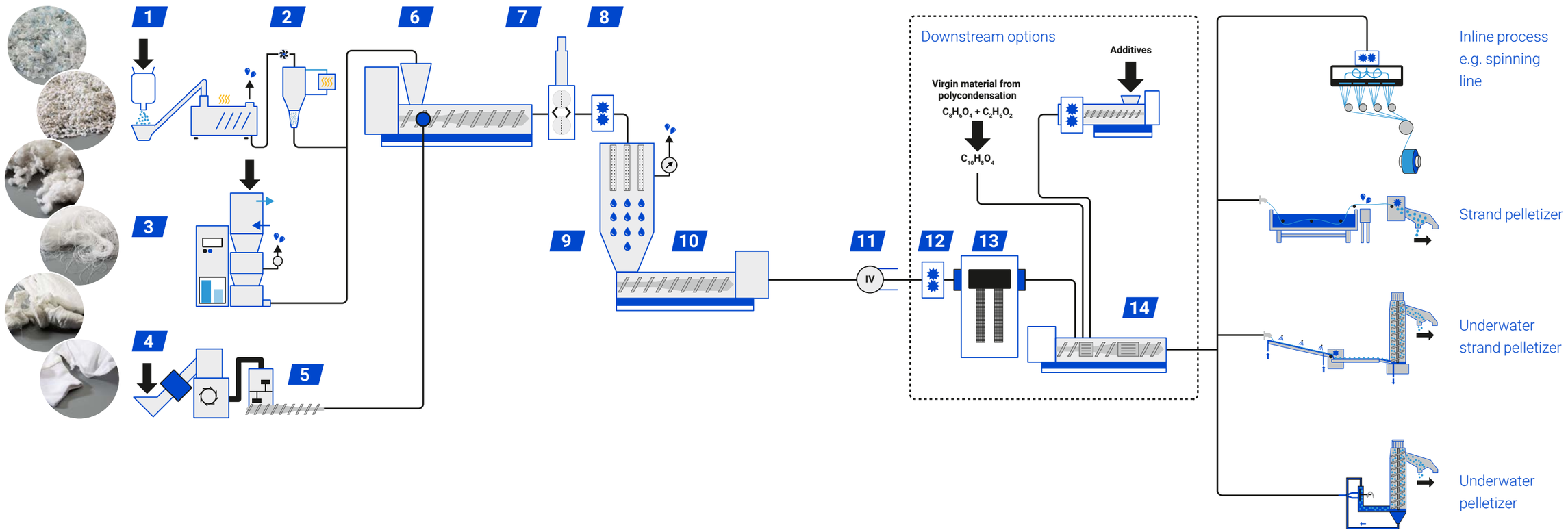

1 Infrared dryer

2 Optional desiccant dryer

3 Vacuum dryer
Low energy consumption, short residence time, low temperatures for minimum decolouring

4 Modular Shredder
Shredding and cutting of raw materials

5 Extruder side-feeding unit
Side-feeding, homogenisation and pre-drying, flakes dosing

6 Vacuum extrusion
Decontamination and homogenization

7 Piston screen changer
Coarse filtration with integrated backflush function

8 Melt pump

9 Visco+
Decontamination and IV build-up (minimized material fluctuations ± 0,01 dl/g)

10 Hot melt extrusion
Including CrystallCut®

11 Viscometer
Reliable measuring of viscosity, Monitoring production

12 Melt pump

13 Large area filtration
Continuous, gentle melt filtration of smallest particles and gels, filtration fineness down to 15 µm)

14 3DD mixer, side feed extruder and/or melt stream from polycondensation
Blending of e.g. additives or different polymer melt streams

BBENGINEERING
The Valueneering Company®

Visco+ LSP system

Pure melt. Precise viscosity setting.

Visco+ is a liquid state polycondensation unit which produces a homogeneous, pure melt with a targeted IV setting with the help of vacuum. Not only being key component of VacuFil® recycling line, the Visco+ filter is also available as a separate and easily-integratable upgrade component for existing systems by BBE or other manufactuers – for instance, for returning polyester production waste to the melt flow, but also for achieving a homogeneous viscosity in the case of virgin material.

Range of application

- Recycling of PET waste
- Improving virgin PET
  - IV homogenization: if an existing production system is struggling with IV fluctuations, the Visco+ is able to actively intervene and balance out any irregularities;
  - IV increase: if the final viscosity is insufficient when processing recycled materials, the Visco+ can increase the IV without the negative im-pact of long residence times.

Intrinsic viscosity and process stability

The intrinsic viscosity is the central quality feature in PET recycling and rPET processing. It determines the melt performance within the production process and the properties of the end products. Therefore, it is essential for the recycling process to achieve, and maintain, the precise IV value necessary for the respective application.

Visco+ makes the difference

Visco+ guarantees this and produces rPET melt with the specifically-required IV – in a reliable and stable manner. A liquid-state polycondensation principle is used for decontaminating the starting material. Here, two factors play important roles: the greatest possible melt surface and the molecules' movement capacity. The Visco+ filtration ensures an enormous material surface compared to volume and continually renews this. In other words: the melt molecules are constantly in motion and hence contamination can be continually and reliably removed by means of high-performance vacuum.

Fast	50% faster than common LSP systems
Controllable	IV fully controllable and flexibly adjustable during running operaton
Reliable	IV is continually monitored by means of online viscometer and automatically regulated in the event of deviations

Did you know?

Faster and more effective: Recycling via Liquid-State-Polycondensation

PET condensed in liquid state under vacuum. Condensation goes hand-in-hand with a fast IV increase. Liquid-state polycondensation processes exploit this property and are particularly effective at removing contamination such as that found in the starting material using high-performance vacuum. To this end, adding disparate PET qualities in various volume ratios can produce a pure, homogeneous melt with controllable IV values and consistent quality comparatively* quickly – perfect for seamless subsequent production phases.

*Compared to solid-state polycondensation processes

BBENGINEERING
The Valueneering Company®

BBE demo line, open house event 2022

Technical specifications – IV process range

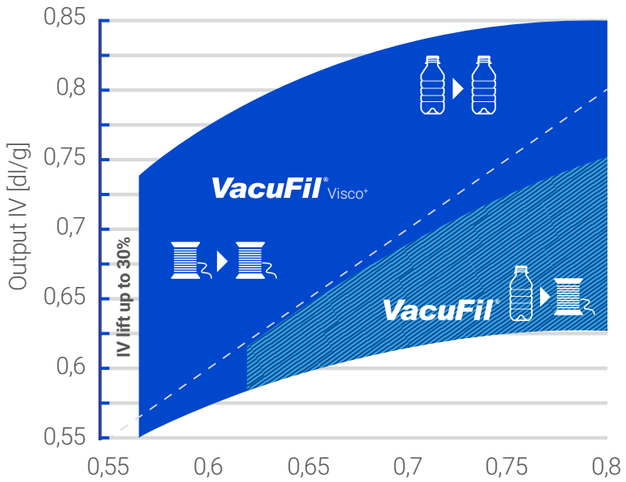

With VacuFil® a wide range of input IVs can be merged to the desired output application. Visco+ enables to achieve large IV increase ranges – whether it is fiber to fiber or bottle to bottle.

VacuFil® types and their throughput

Type	Throughput range (kg/h)
VacuFil® 300	150 - 300
VacuFil® 500	250 - 500
VacuFil® 1000	500 - 1000
VacuFil® 2000	1000 - 2000
VacuFil® 3000	1500 - 3000
VacuFil® 4000	2000 - 4000

For higher throughputs, please consult with our sales team.

VacuFil® benefits at a glance

Quality assurance

We rely on our and Barmag's decades long experience as supplier of world market leaders and make highest quality demands on ourselves and our products. Gentle plastification with BBE's barrier mixing screw, low melt temperatures, short residence times and profound melt pipe layout lead to the ideal melt quality you need – in a reproducable way because of continual monitoring.

High production efficiency

A seamless recycling process that enables direct further processing – even without granulation with interim storage and mandatory remelting.

Everything from a single source

Benefit from BBE's spinning know-how, the Barmag Service Network and an overall system that unites all the functions – including pre-drying, decontamination, extrusion and filtration – in a seamless, turn-key manner.

Resource-efficient

Saves space, energy, time and logistics.

Our testing plant is open for your trials.
Make use of our material evaluation know-how and test your material on different process settings e.g. our unique inline fiber-to-fiber process.

BBENGINEERING
The Valueneering Company®

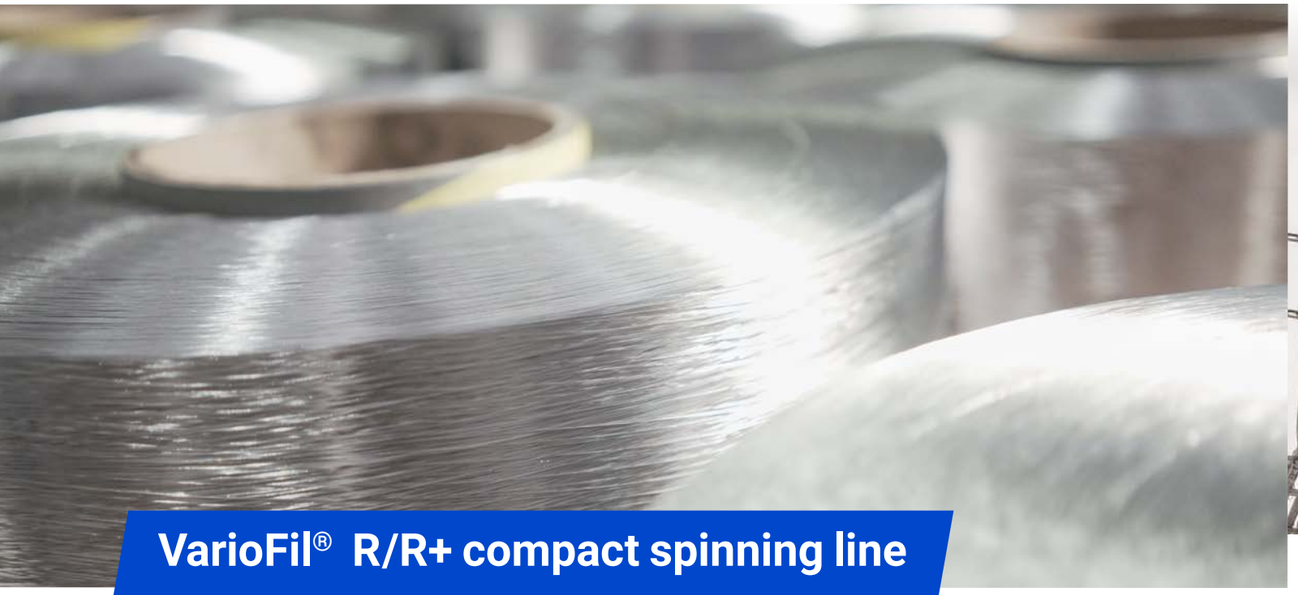

VarioFil® R/R+ compact spinning line

From rPET or bottle flakes to fiber

VarioFil®R/R+ spinning lines use either rPET chips (R) or even bottle flakes (R+) as a feedstock for dope-dyed POY. They are the ideal production unit for manufacturers that have a wide range of products, small lot numbers or specialised products.

What makes the difference?

Advanced technology
- Extrusion system for bottle flake material
- IV increase via Visco+ LSP if needed
- WINGS technology by Barmag
- New textile spinpacks with increased filtration performance for long lifetime
- Advanced 2-step melt filtration
- Latest metering and blending technology for dope-dying
- High precision dosing of master batches and additives

High performance
- Even yarn quality
- Minimum staining
- Less breaks, minimum waste

Plug & profit
- Individual machine configuration
- Turnkey line from one source
- Fast and easy start-up due to pre-assembling and testing before shipment

Reduced operating costs
- Energetically optimized process
- Low maintenance costs
- Simple operation

Bottle flake to filament*
Filament to filament*

*POY

- Up to 12 ends
- Output up to 980 kg/h
- Winding speed up to 3500 m/min
- Denier range 50 – 600 den final

BBENGINEERING
The Valueneering Company®

VarioFil® configuration examples

VarioFil®is a modular, flexible system. Its configuration is oriented on the polymer and specific process. Therefore, each VarioFil®line is customized to the clients' requirements and can be supplemented with optional extras. These are just two examples of many possibilities.

example 1:
VarioFil® R
rPET chips to POY

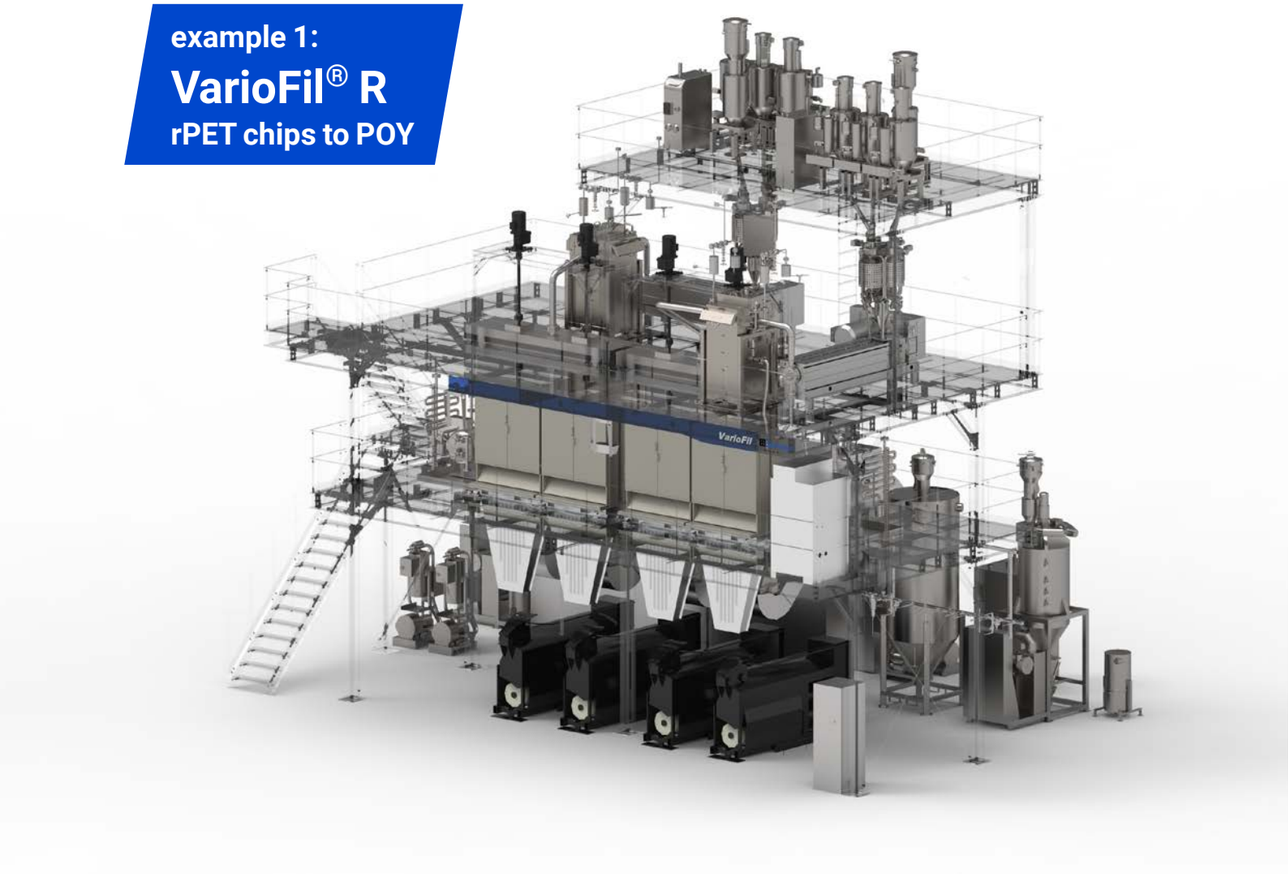

Configuration	
Polymer	rPET chips
Capacity	up to 420 kg/h
No. of extruders	2
No. of yarn ends	4 x 10
No. of yarn ends per winder	10
Available stroke	120 mm
Titer range (final)	150 – 300 den
Winder	Barmag WINGS POY
Dimensions (L x W x H)	14 x 10 x 13 m

example 2:
VarioFil® R+
Recycling of flakes directly to POY

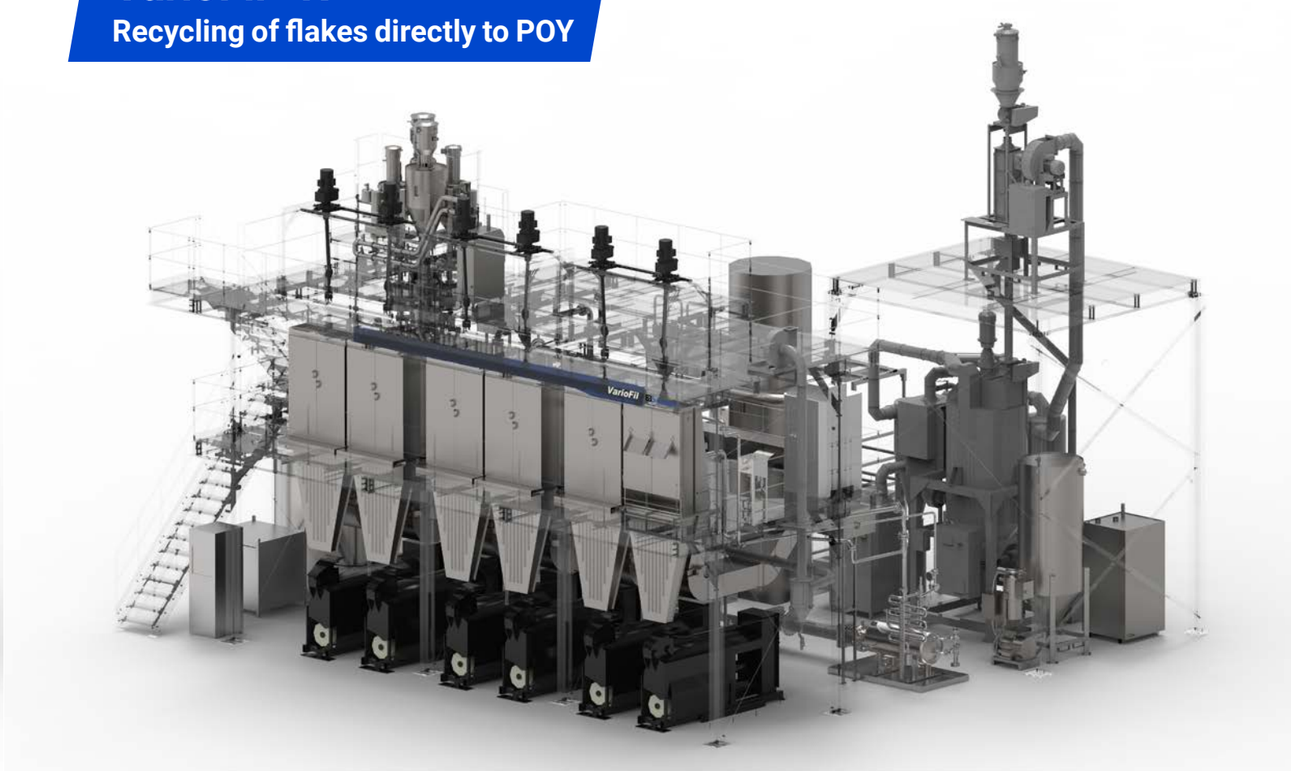

Configuration	
Polymer	PET bottle flakes
Capacity	up to 185 kg/h
No. of extruders	1
No. of yarn ends	6 x 12
No. of yarn ends per winder	12
Available stroke	120 mm
Titer range (final)	50 – 75 (100) den (plyed)
Winder	Barmag WINGS POY
Dimensions (L x W x H)	15 x 14 x 10 m

Recycling technologies

BB ENGINEERING
The Valueneering Company®

rPET compatible extrusion technologies

For PET recycling lines or processing rPET

Producing a homogeneous melt is hugely challenging, but necessary in order to manufacture certain end products – particularly using rPET. BB Engineering offers the perfect technology for this. We are experts in building extruders for different applications, especially spinning and film production, and highest demands regarding melt quality. In terms of rPET we offer components for post-production /post-consumer PET waste recycling lines as well as for processing of rPET chips.

- Single-screw extruders for melting, degassing, and homogenizing
- Extrusion cascades
- Mixing concepts
- Melt pumps

Extruders

Efficient production of high-quality goods

Extruder range for recycling PET waste or processing rPET			
L/D ratio	30D	48D	Cascade 30D + 16D
Screw diameter	60 – 360 mm	90 – 175 mm	90 – 360 mm
Input	Pre-dried material PET, PA, PP, rPET, rPA, rPP	Undried Material PET, rPET	
Throughput*	25 – 4000 kg/h	100 – 1000 kg/h	100 – 4800 kg/h
Downstream options	• Pelletizing • Direct further processing – i.e. direct spinning • 3DD-mixing for finishing melt or rPET ratios in poly main stream and more		

*Depending on input, higher throughput on request

High quality output

- Optimized polymer homogenization
- Low thermal and mechanical stress
- Precise temperature and process control
- Short residence time
- Applicable for a wide range of processing and product requirements

Long lifetime

- Robust design and state-of-the-art machinery
- Bimetallic cylinders
- Long-lasting drive layout
- Long-term trouble-free operation
- Above-average service life
- Low maintenance costs

100% tailor-made

- Customized, computer-aided screw design perfectly adapted to polymers and products
- Different heights available
- Different drive arrangements available
- Extrusion cascade systems incl. filters, booster pumps, melt pipes, drain valves, melt mixers and others

Design example: 30D extruder without degassing

BBENGINEERING
The Valueneering Company®

Mixing heads

Even more even.

BBE extruders can be equipped with mixing heads for both better homogeneity regarding viscosity, temperature and colour, and for the addition of colours and other additives. Different types of mixing heads are available, each suitable for certain raw materials and end products.

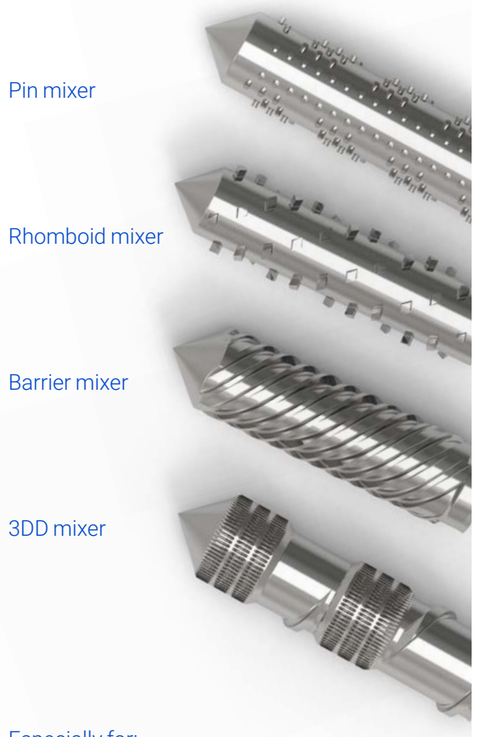

3DD mixing standalone unit

Upgrade or finish your rPET melt

The 3DD (3-Dimensional Dynamic) mixer principle by BBE provides excellent distributive and dispersive blending. It is the most effective mixing technique due to its arc-shaped cavities of the internal rotating section and the stationary section in the cylinder. Hence, 3DD mixing fulfils a variety of complex mixing tasks and thereby ensures your products' quality.

Especially for:

- Upgrading with colours
- Finishing with additives
- Homogenization e.g.
  - rPET ratios in poly main melt stream
  - blending different viscosities

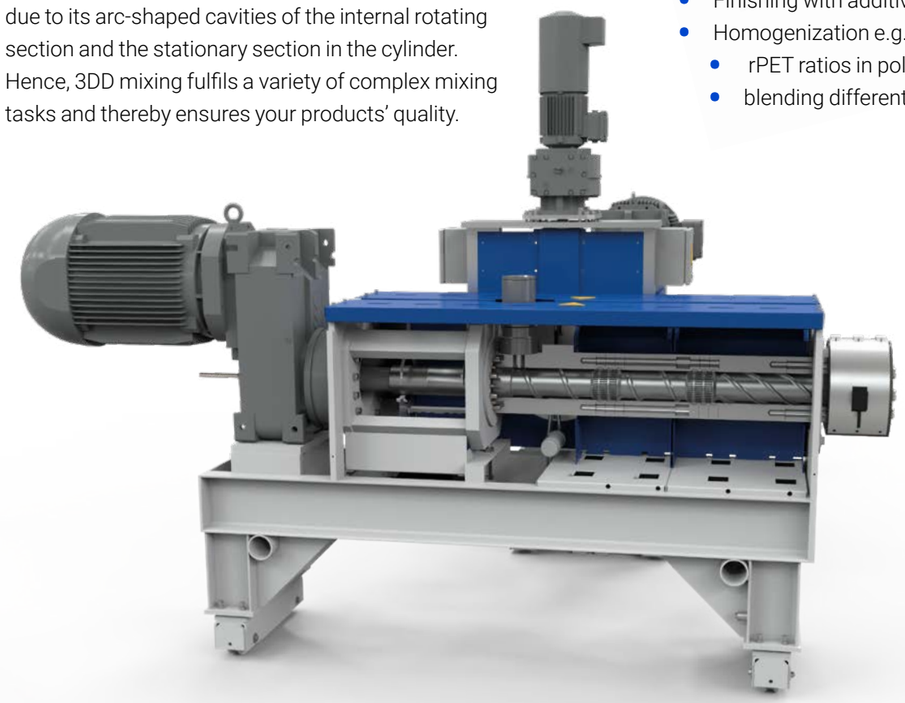

Configuration	
Rotor diameter	60 – 300 mm
Throughput	50 – 4,000 kg/hr (for textile PET)
Input	PET, PE, PP, masterbatches
Tailored additive feeding system consisting of mixer, metering pump and side extruder	

Functions of the 3DD mixing standalone unit

- **Upgrade or retrofit:** Add-on for your new or existing extrusion, spinning or polycondensation plants.
- **Extended product range:** Adjustable mixing effect, pressure and melt temperature lead to high flexibility and therefore, allow extended product range and specific change of melt characteristics e.g. special colours, modified yarn types, certain ratio of recyclate.
- **Improved ecological footprint:** By colouring your melt with 3DD before e.g. spinning it you can skip subsequent dyeing, hence reduce water and chemicals consumption.
- **Zero-waste-approach:** Link your rPET melt stream to your virgin/main melt stream via 3DD mixing and blend your desired ratio of recyclate perfectly in (see example below).

Application example

Re-feeding of recycled production waste into on production stream of a spinning mill

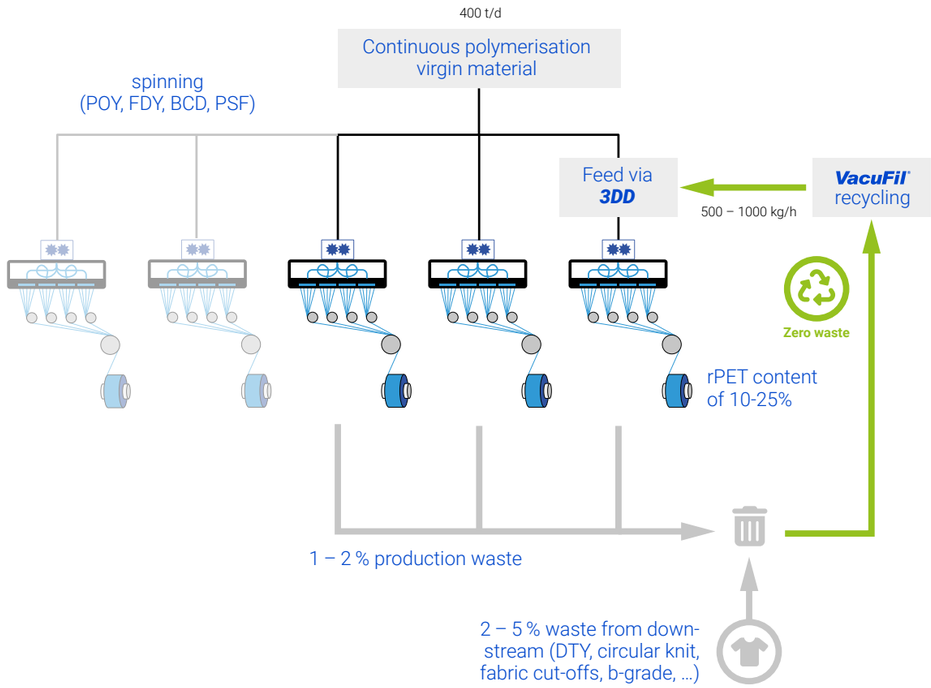

BBENGINEERING
The Valueneering Company®

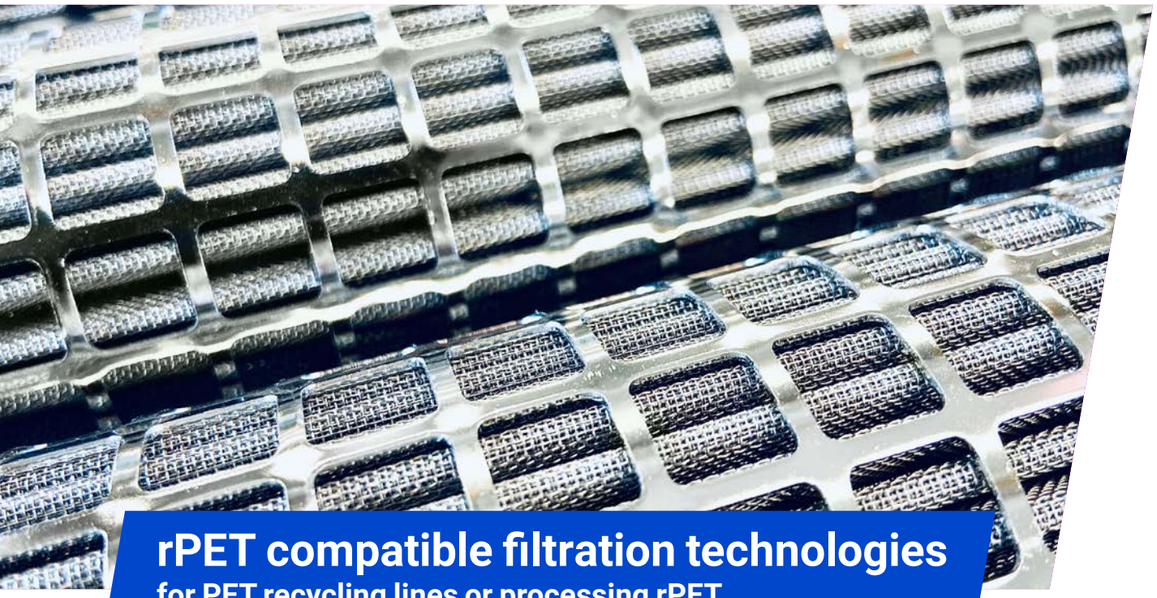

rPET compatible filtration technologies
for PET recycling lines or processing rPET

Recycling and filtration go hand-in-hand. Effective filtration is absolutely essential for both recycling PET waste into good-quality recycled materials and further processing recycled materials into high-quality products. Micro-contamination impacts not just the quality and the properties of your end products, it also influences the production process and your manufacturing systems.

Polymer filters by BBE guarantee a clean, pure melt and therefore the ideal base for any further processing – non-stop and perfectly fitted to your requirements and production line.

Non-Stop Filter (NSF)

- Large-area filter
- Two-chamber housing: one chamber in production an one in stand-by, interference-free switchover during production via 3/2 way valve
- Filtration area: 2 x 1.8 up to 2 x 40 m²
- Filter media: typically candles
- Fine filtration: 15 – 40 µm (depending on application)

Our filters' benefits

- ✓ Suitable for a broad range of applications
- ✓ Continuous operation – no stop for changeover
- ✓ Optimal melt guidance
- ✓ Minimum loss of pressure
- ✓ Low energy consumption
- ✓ Conform with AD 2000 & PED 2014/68/EU

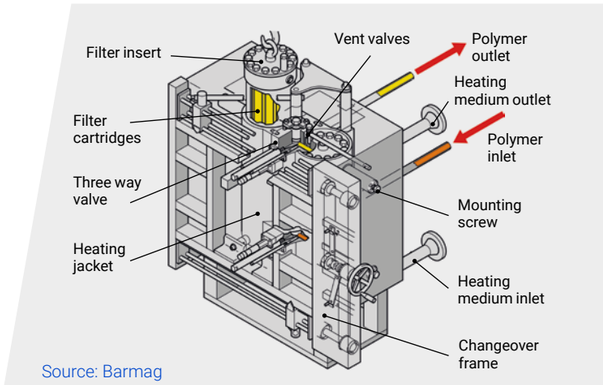

Source: Barmag

Continuous Vertical Filter (CVF)

- Melt inlet and outlet at same height, fitting perfectly in line, especially for spinning systems
- Two-chamber housing: one chamber in production an one in stand-by, interference-free switchover during production via 3/2 way valve
- Filtration area: 2 x 0.4 up to 2 x 8 m²
- Filter media: typically candles
- Fine filtration: 15 – 40 µm (depending on application)

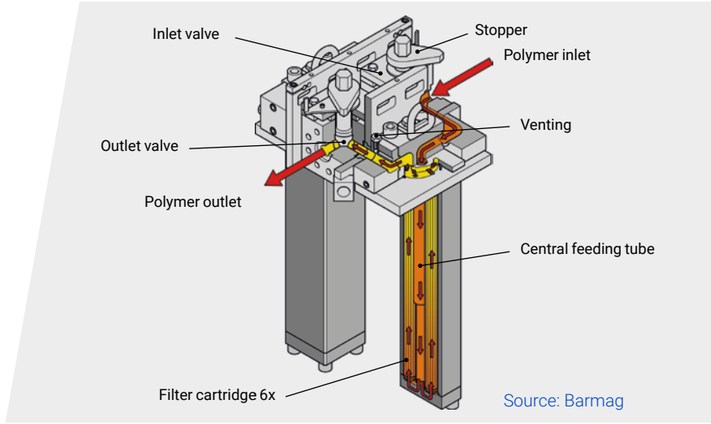

Source: Barmag

White Filter Cleaning (WFC)
The sustainable filter pre-cleaning system

Our WFC technology is a cleaner pre-cleaning system for your filter media: It works without dangerous, harmful chemicals such as TEG. Instead, it uses superheated, steam to effectively remove a range of polymer contaminants by hydrolotic degradation. This treatment is not only eco-friendly, but it improves the filtration performance and prolongs media lifetime.

WFC is available as standalone as well as inline unit. As inline version in combination with our continuous filters WFC saves you time and costs as it starts the cleaning process immediately and parallel to production.

Medium before WFC

Medium after WFC

1. Steam supply unit
2. Nitrogen control
3. Heating and draining station
4. Steam pressure relief valve
5. Waste collector with recondensation

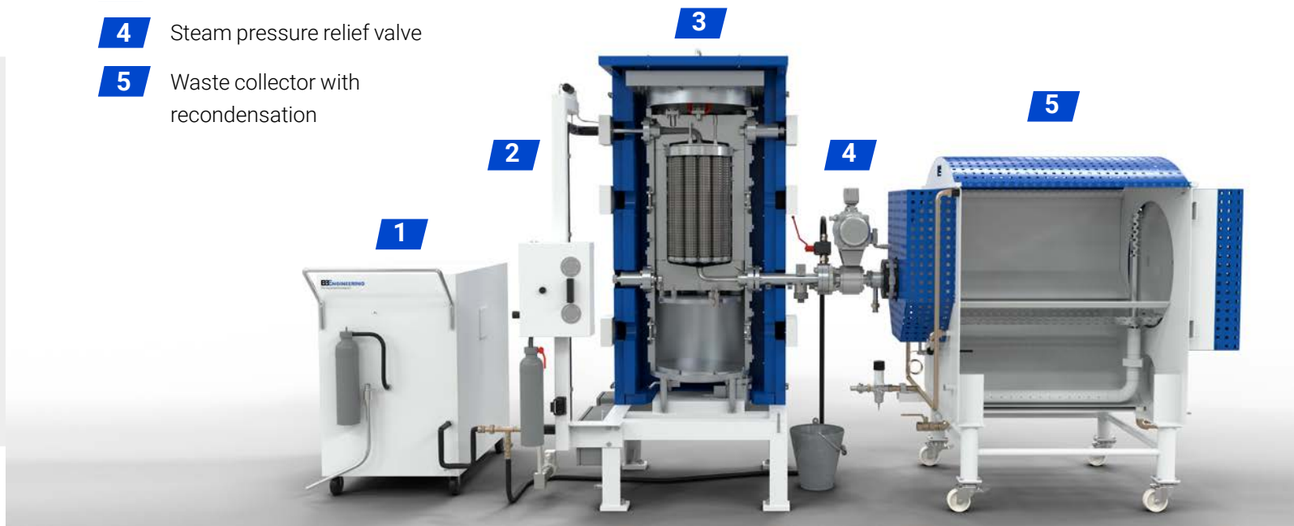

BBENGINEERING
The Valueneering Company®

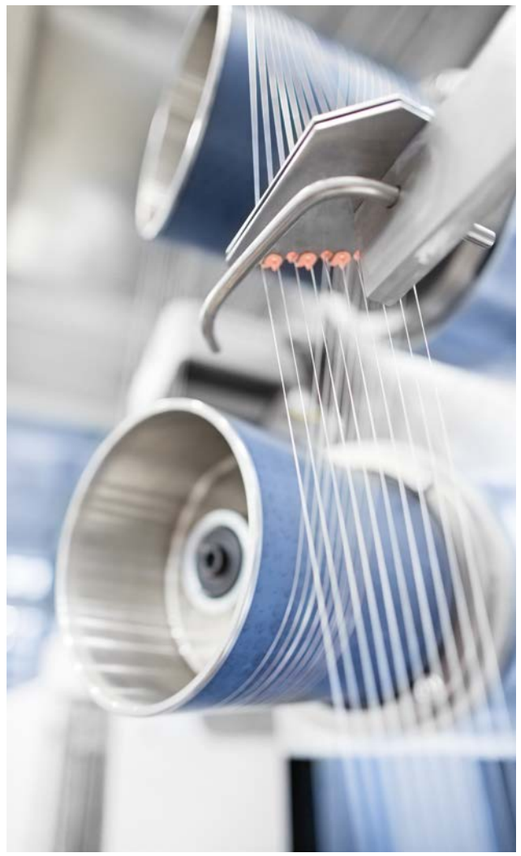

BBE Valueneering

Innovative services in the field of machines and plant design for more than 25 years.

Our business is development, engineering, design and manufacturing of extrusion and filtration technologies as well as complete spinning (VarioFil®) and recycling (VacuFil®) machines for the plastics and textile industry. The services offered range from the design and planning phases all the way through to the implementation of projects. Innovation, quality and trust are our greatest strengths from which you will benefit. Founded in 1997 as a joint venture between Barmag, nowadays a subsidiary of Rieter, and Brückner Group GmbH, the company nowadays employs more than 160 members of staff at its Remscheid-Lennep location.

Worldwide operation

All over the world companies trust in our products and services. Closely partnered with Barmag Customer Services, we provide a global service network comprising about 20 service stations, over 60 agencies and hotline support for finding solutions to the challenges you face.

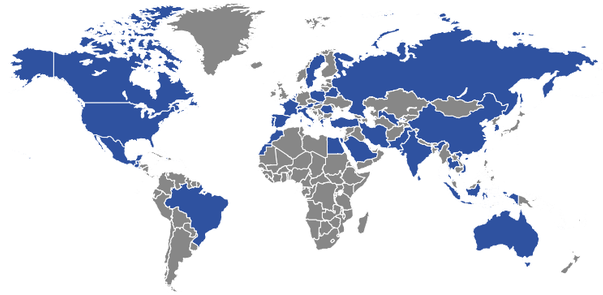

● Countries with BBE customers

Let‘s get in touch

Our experts look forward to hearing from you and are ready to answer any questions you may have.

@ sales@bbeng.de

+49 21 91 95 10 300

www.bbeng.de

The Valueneering Company®

BB Engineering GmbH
Leverkuser Str. 65
42897 Remscheid
Germany
Fon +49 2191 9510 - 100
sales@bbeng.de
www.bbeng.de

The information supplied in this brochure is for guidance only.
We reserve the right to modify it at any time.

VarioFil® is a registered trademark of Oerlikon Textile GmbH & Co. KG.
VacuFil® is a registered trademark of BB Engineering GmbH.

Recycling
02/2026